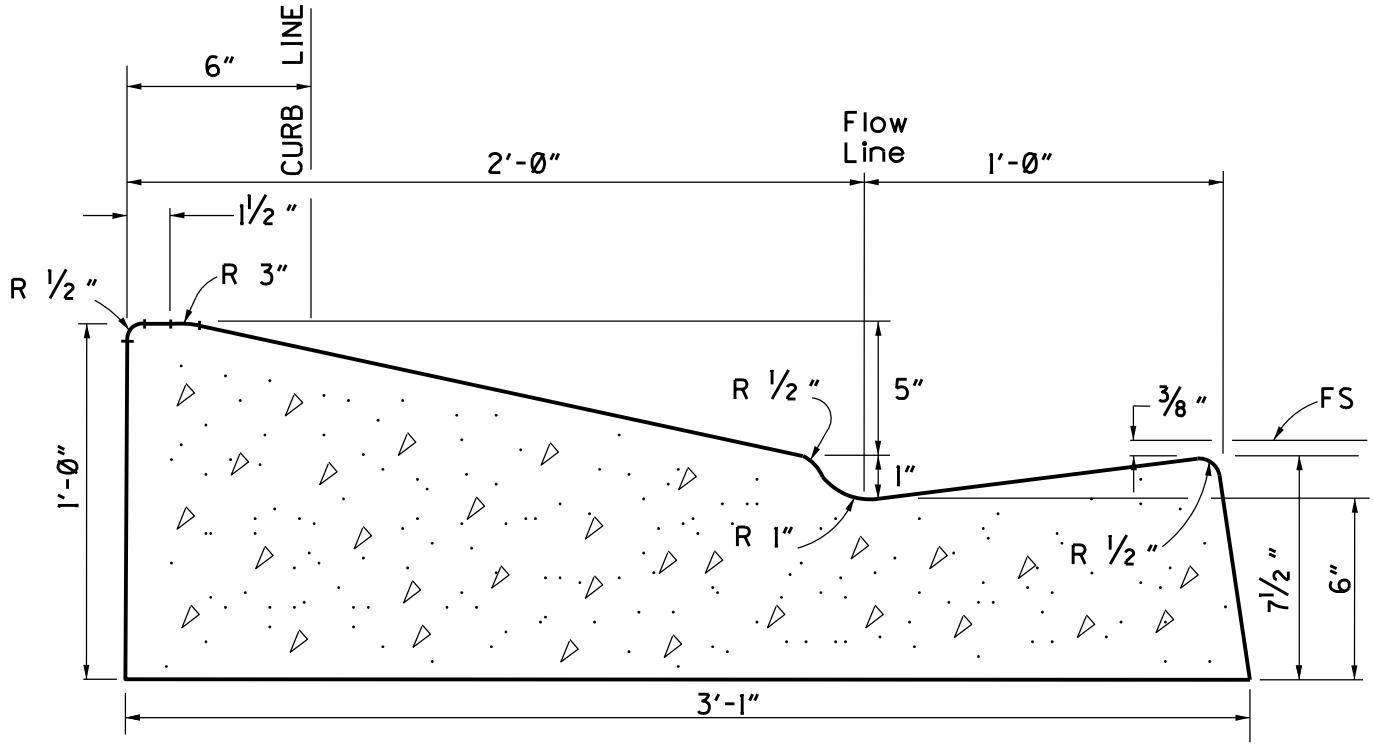

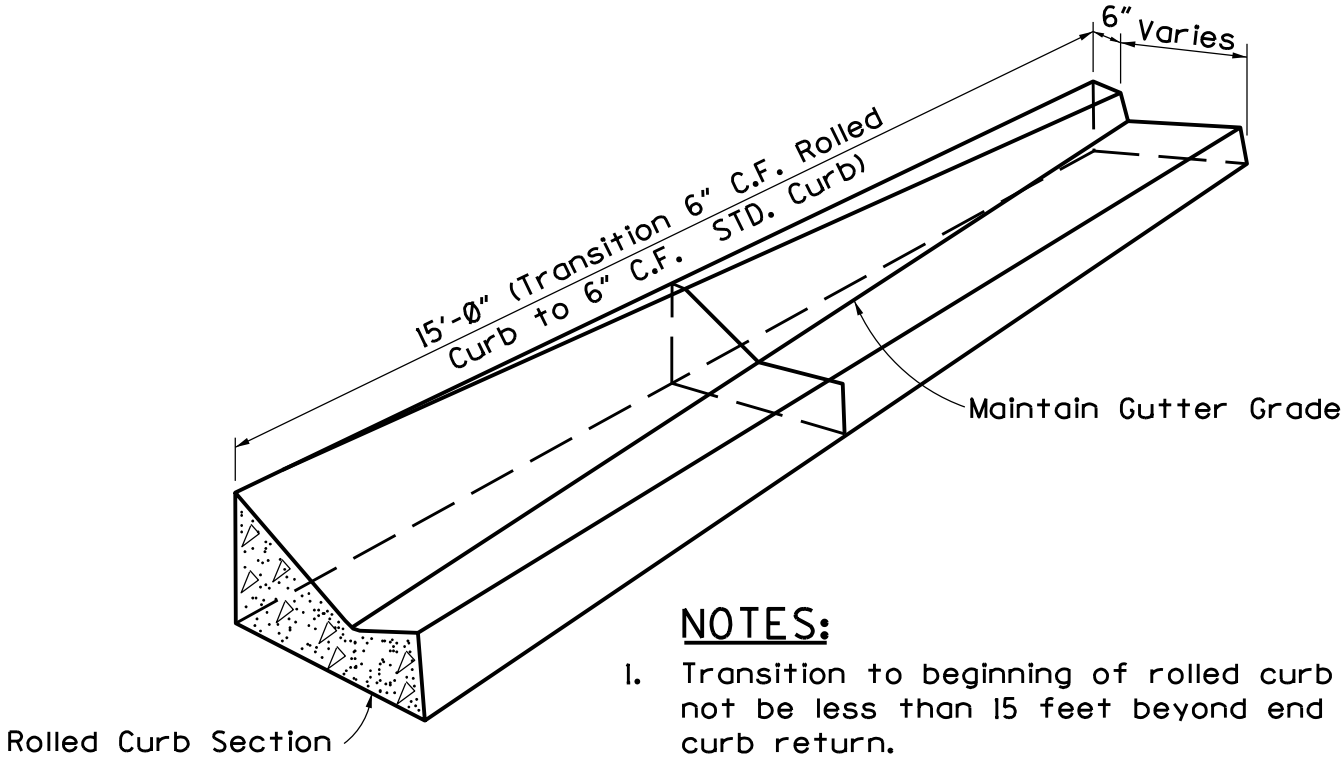

NOTES:

1. Transition to beginning of rolled curb shall not be less than 15 feet beyond end of curb return.
2. Street width shall be measured from flow line to flow line.
3. May be used on non-private streets.

COUNTY OF ORANGE, OC PUBLIC WORKS DEPARTMENT

Approved _____
Ignacio G. Ochoa, Chief Engineer

Revision: April 2013

STD. PLAN

1201

SHT. 1 OF 1

CONCRETE ROLLED CURB, PRIVATE STREET

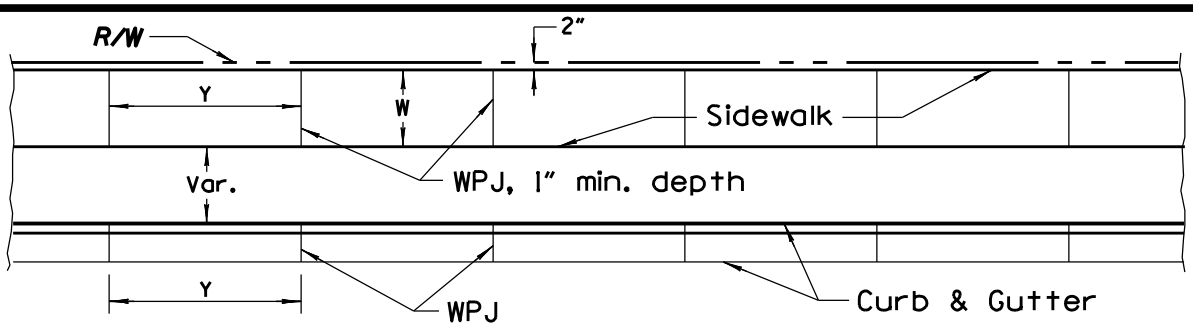

APPLICATION	W	Y
Arterial roads•	Full Pkwy.	10'
Residential sidewalk adjacent to R/W ••	4'	10'
Residential sidewalk adjacent to curb•••	5'	10'
Commercial, industrial, and school zones	Full Pkwy.	10'

NOTES:

Thickness=4 inches PCC standard; 6 inches within driveway area.

CURB & GUTTER:

WPJ shall be placed at each side of driveways, at the ends of all curb returns, and at 10 foot intervals (except within curb returns), to a depth of 1½ inches with edger finish.

SIDEWALK:

WPJ shall be constructed in sidewalks, 1 inch minimum depth, at 10 foot intervals and at ends of drive approaches, curb returns and tree wells.

Joints shall be edger finished (R= ⅛ inch).

Color additives or pattern stamped concrete shall not be used.

- • W may be reduced to 5 feet with adequate provision for maintenance of remaining parkway.
- •• Recommended where grade is less than 5 percent and design is consistent with adjacent residential development.
  Pursuant to ADA requirements, a sidewalk with a clear width less than 5 feet shall provide passing spaces at intervals of 200 feet maximum. Passing space shall be a minimum space of 5 feet by 5 feet.
- ••• Recommended when grade is greater than 5 percent. Utility vaults, hydrants, mailboxes and other obstructions must be placed back of sidewalk.

See Std. Plan 1410 for vertical obstruction location.
See Std. Plan 112-2-0C for joint details.

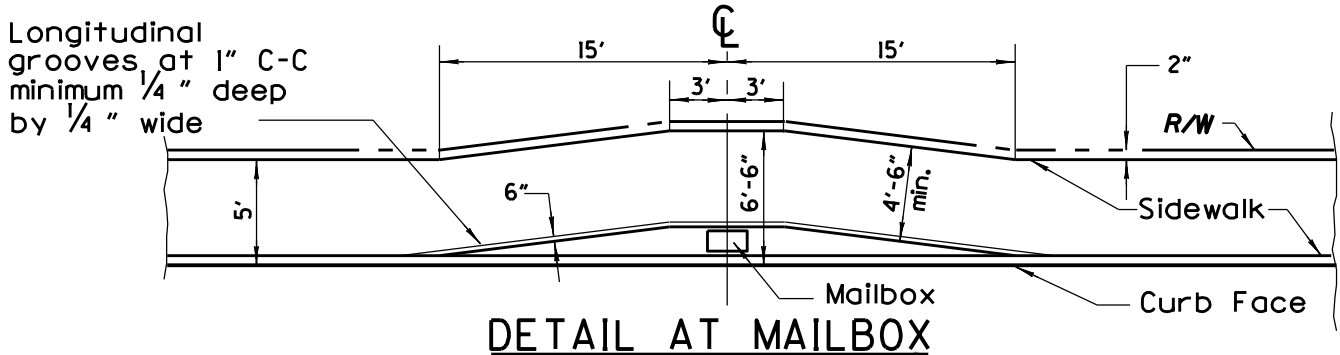

DETAIL AT MAILBOX

COUNTY OF ORANGE, OC PUBLIC WORKS DEPARTMENT

Approved _____
Ignacio G. Ochoa, Chief Engineer

Revision: April 2013

STD. PLAN

1205

SHT. 1 OF 1

SIDEWALK DETAILS

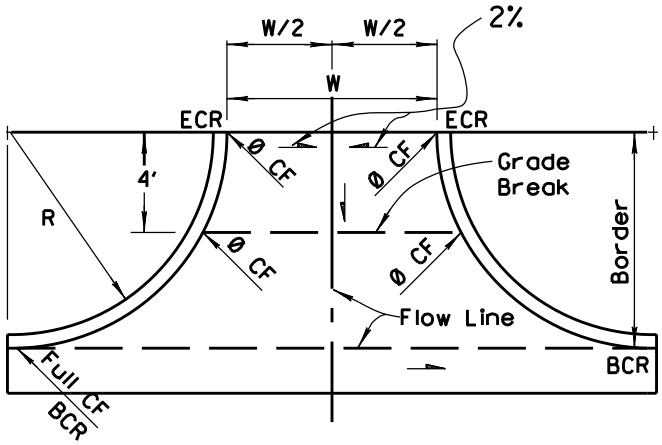

STANDARD APPROACH

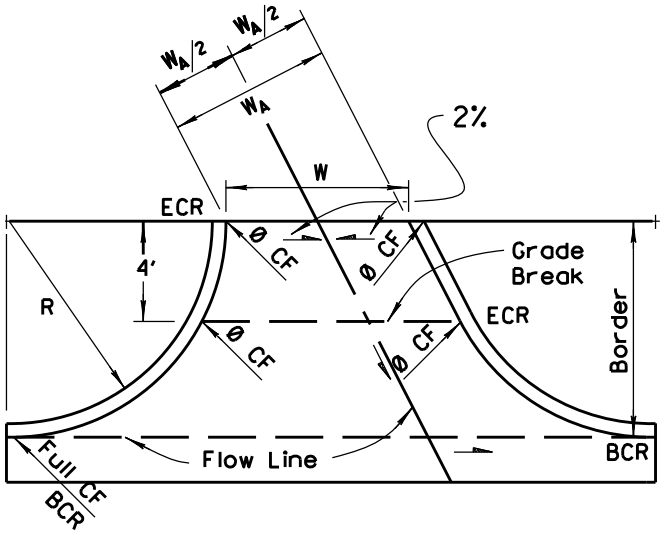

ANGLED APPROACH

NOTES:

1. Alley longitudinal gutter shall be per detail shown on Standard Plan 122-2-0C.
2. Structural section on both sides of alley longitudinal gutter to be determined by the Engineer.
3. Weakened plane joints shall be constructed at maximum 10 feet on-center in alley gutter.
4. Alley width shall be 20 feet minimum.
5. The radius of the curb return, R, is equal to the parkway width.
6. Alley intersection shall be PCC class 520-C-2500, 6 inch thick. Curb shall be integral with Type "A2" Barrier Curb, per Standard Plan 120-2-0C.
7. W and W_A dimensions per plan sheet.
8. Curb returns to include curb ramps (Type 6 or 7) consistent with Standard Plan 1115.

COUNTY OF ORANGE, OC PUBLIC WORKS DEPARTMENT

Approved

Ignacio G. Ochoa, Chief Engineer

Revision: April 2013

STD. PLAN

1206

SHT. 1 OF 1

ALLEY INTERSECTION

See sheet 2 for application.

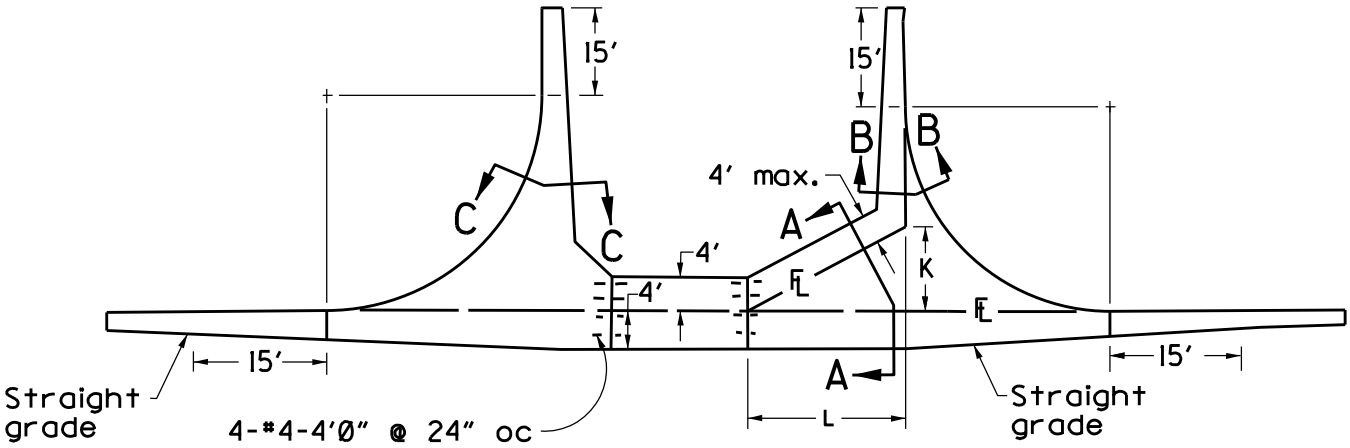

PLAN

NOTE: See Std. Plan 112-2-0C & 122-2-0C for joint details

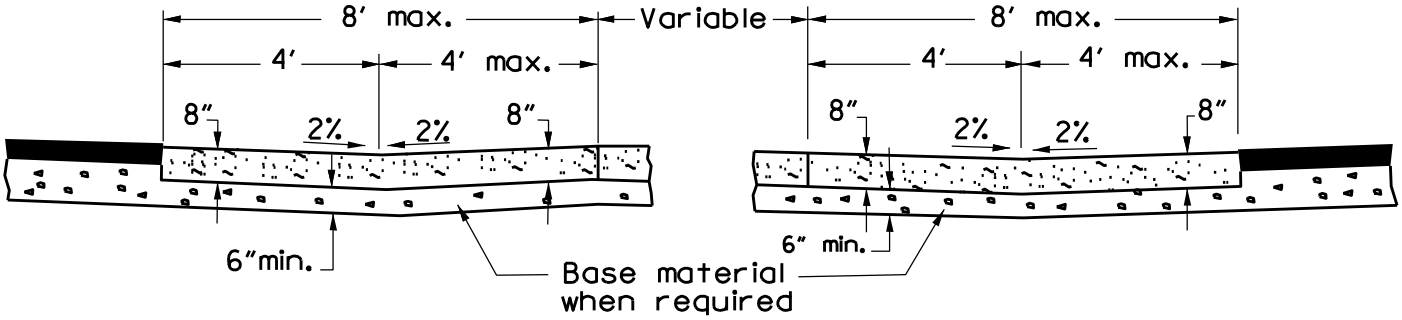

SECTION A-A

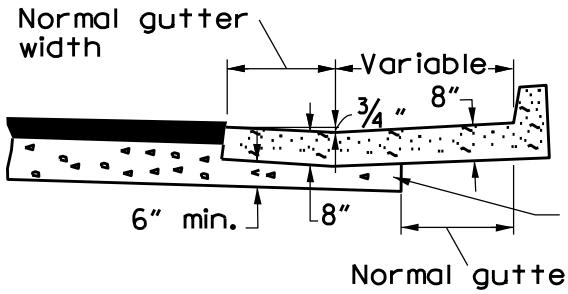

SECTION B-B

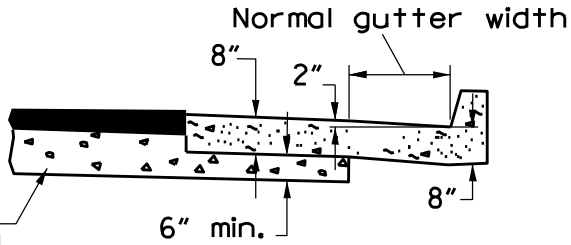

SECTION C-C

COUNTY OF ORANGE, OC PUBLIC WORKS DEPARTMENT

Approved _____
Ignacio G. Ochoa, Chief Engineer

Revision: April 2013

STD. PLAN

1208

SHT. 1 OF 2

SPECIAL CROSS GUTTER (STEEP GRADE)

$L = KG_1 / G_3$

$K \leq L$

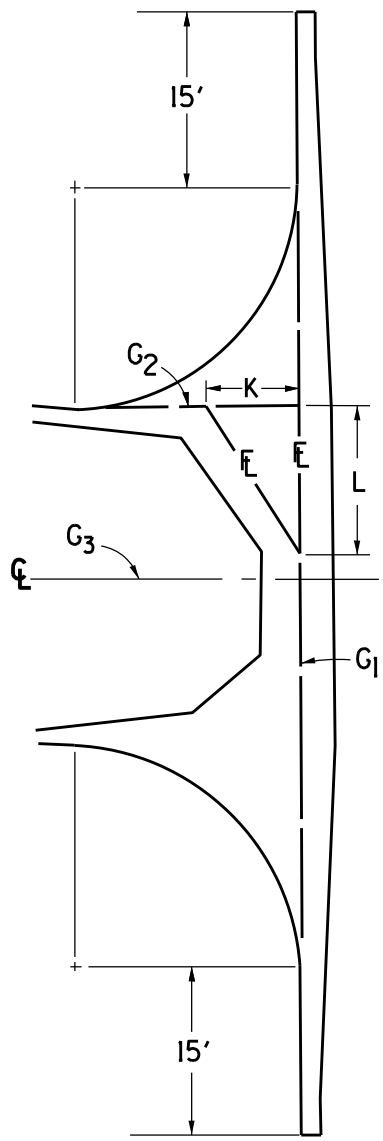

To be used with Sheet 1

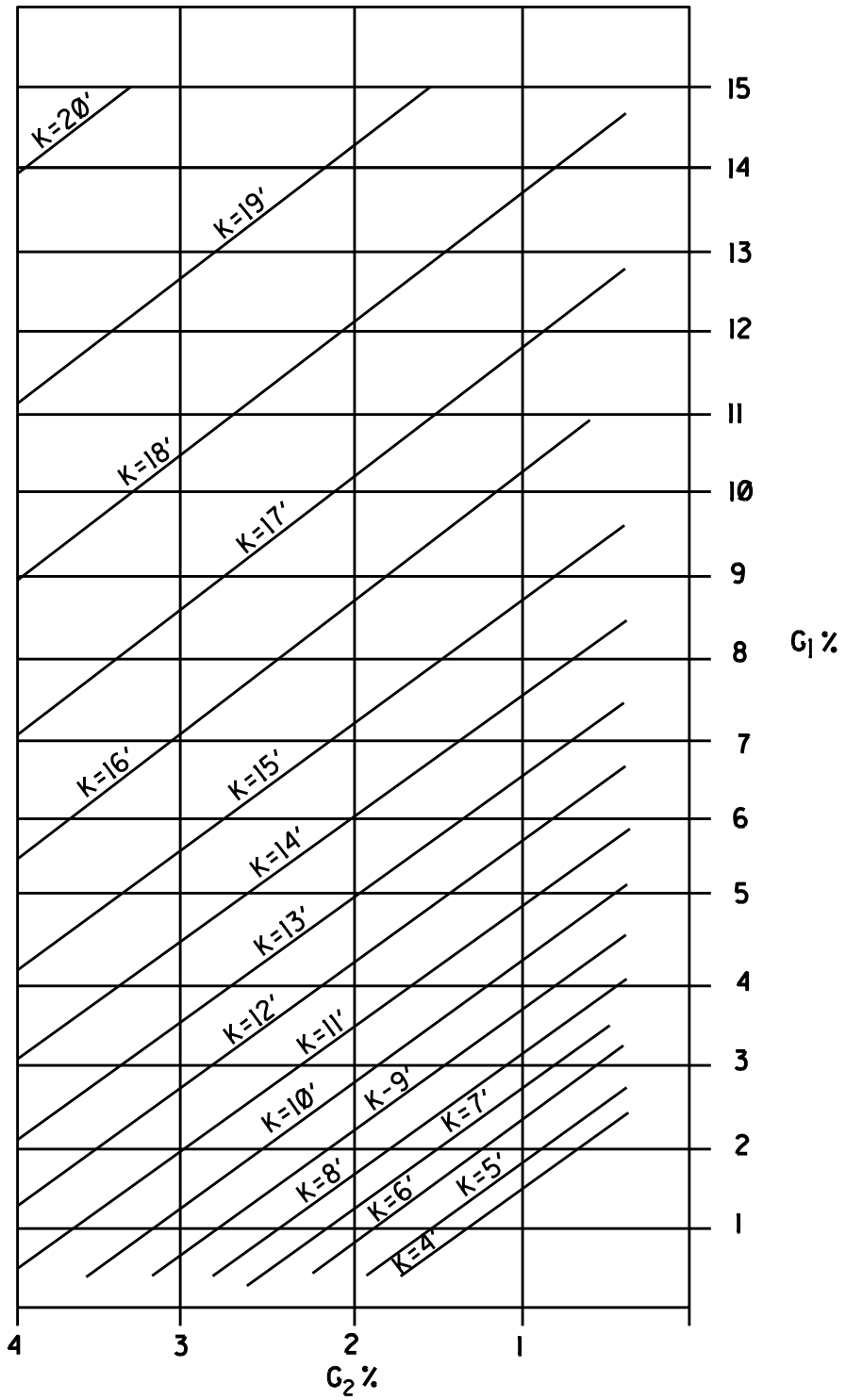

COUNTY OF ORANGE, OC PUBLIC WORKS DEPARTMENT

Approved

Ignacio G. Ochoa, Chief Engineer

Revision: April 2013

STD. PLAN

1208

SHT. 2 OF 2

SPECIAL CROSS GUTTER (STEEP GRADE)

SIDEWALK	VALUES OF "X"
ADJACENT TO R/W	2'
ADJACENT TO CURB	3'
FULL PARKWAY	3'

MINIMUM "W"	MIN.
RESIDENTIAL	12'
COMMERCIAL & INDUSTRIAL ONE WAY TWO WAY	 14' 28'

GENERAL NOTES:

1. In certain situations if all of the following minimums are provided, the result may not be workable. Notwithstanding the minimums, the intent is to produce a driveway that provides reasonable access to the garage.
2. PCC sidewalk and ramp thickness "T" shall be 6 inches.
3. AC section may be constructed between back of sidewalk and right-of-way for residential driveways if the onsite driveway is AC.
4. One (1) foot minimum of full height curb shall be maintained between property line and top of "X" unless a common driveway is warranted per Note 11.
5. No less than 22 feet of full height curb shall be maintained between two driveways on the same property.
6. Commercial, industrial and residential driveways having an anticipated ADT greater than 100 vehicles shall be designed as Flared Depressed Curb Driveway Approaches per Std. Plan 1210. Residential driveways serving more than 25 units and commercial and industrial driveways having anticipated ADT in excess of 1000 vehicles will be designed as local streets with curb, spandrel and cross gutter, subject to approval of the Engineer.
7. Color additives or pattern stamped concrete shall not be used.
8. When garage door opening and right-of-way line are parallel and distance between garage door opening and right-of-way is 20 feet or less, "W" shall be a minimum width equal to the garage door opening and shall be centered on the total garage door opening.
9. When garage door opening and right-of-way line are not parallel, "W" shall be determined in accordance with detail on sheet 4 of 5.
10. When the closest setback distance between the garage door opening and right-of-way is greater than 20 feet, "W" may be reduced and the driveway on site may be curved or angled as necessary providing a minimum distance of 20 feet is maintained adjacent and perpendicular to the garage door in order to provide room for a car to back out of the garage and maneuver. Refer to Detail "B" on sheet 3 of 5, and Detail "C" on sheet 5 of 5.
11. When the "X" of one driveway conflicts with the "X" of an adjacent driveway in a knuckle or cul-de-sac, a common driveway shall be used.
12. It is permissible for the projection of the edges of two adjacent onsite driveways to cross providing they do so within the right-of-way as shown on sheet 5 of 5.
13. Driveways for Panhandle and Flag Lots must meet applicable minimum width requirements as well as allow for maneuvering room as called for by note 10.
14. See Std. Plan 1107 for parkway notes and Std. Plan 1205 for additional sidewalk details and notes.

COUNTY OF ORANGE, OC PUBLIC WORKS DEPARTMENT

Approved _____
Ignacio G. Ochoa, Chief Engineer

Revision: April 2013

STD. PLAN

1209

DEPRESSED CURB DRIVEWAY APPROACH

SHT. 1 OF 5

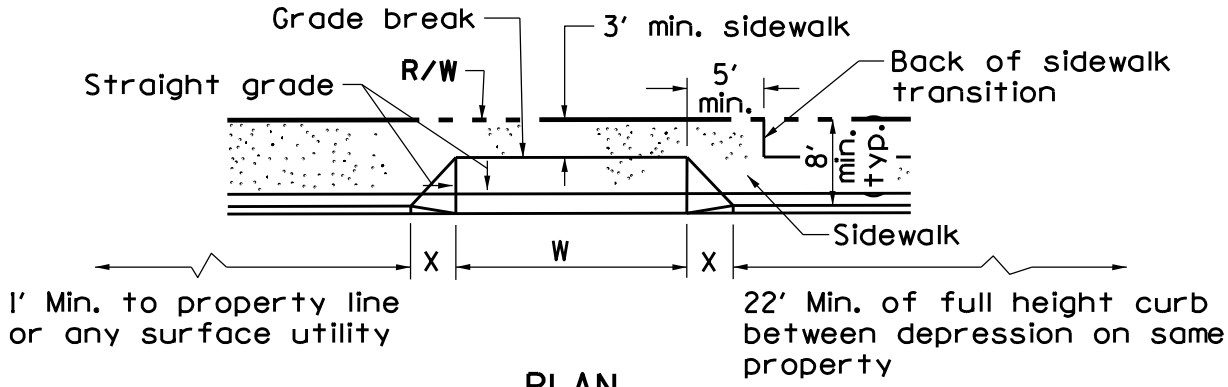

PLAN

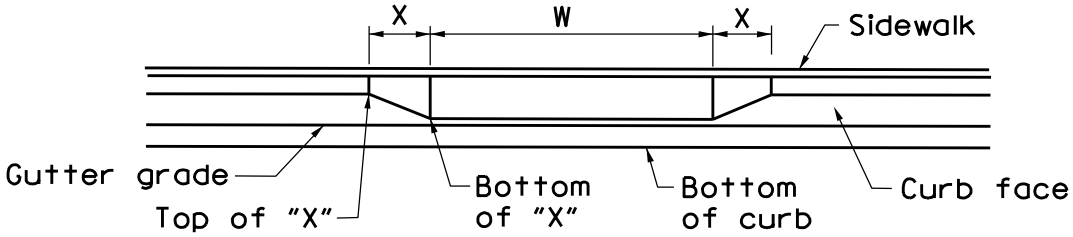

ELEVATION

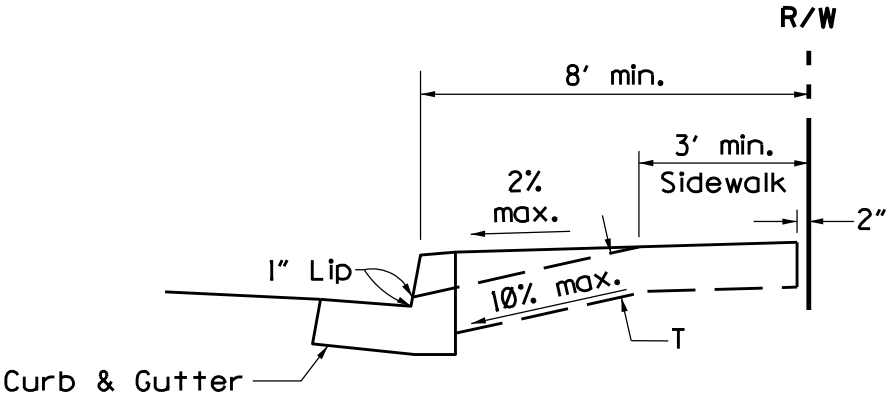

CURB & SIDEWALK SECTION

COUNTY OF ORANGE, OC PUBLIC WORKS DEPARTMENT

Approved _____
Ignacio G. Ochoa, Chief Engineer

Revision: April 2013

STD. PLAN

1209

DEPRESSED CURB DRIVEWAY APPROACH

SHT. 2 OF 5

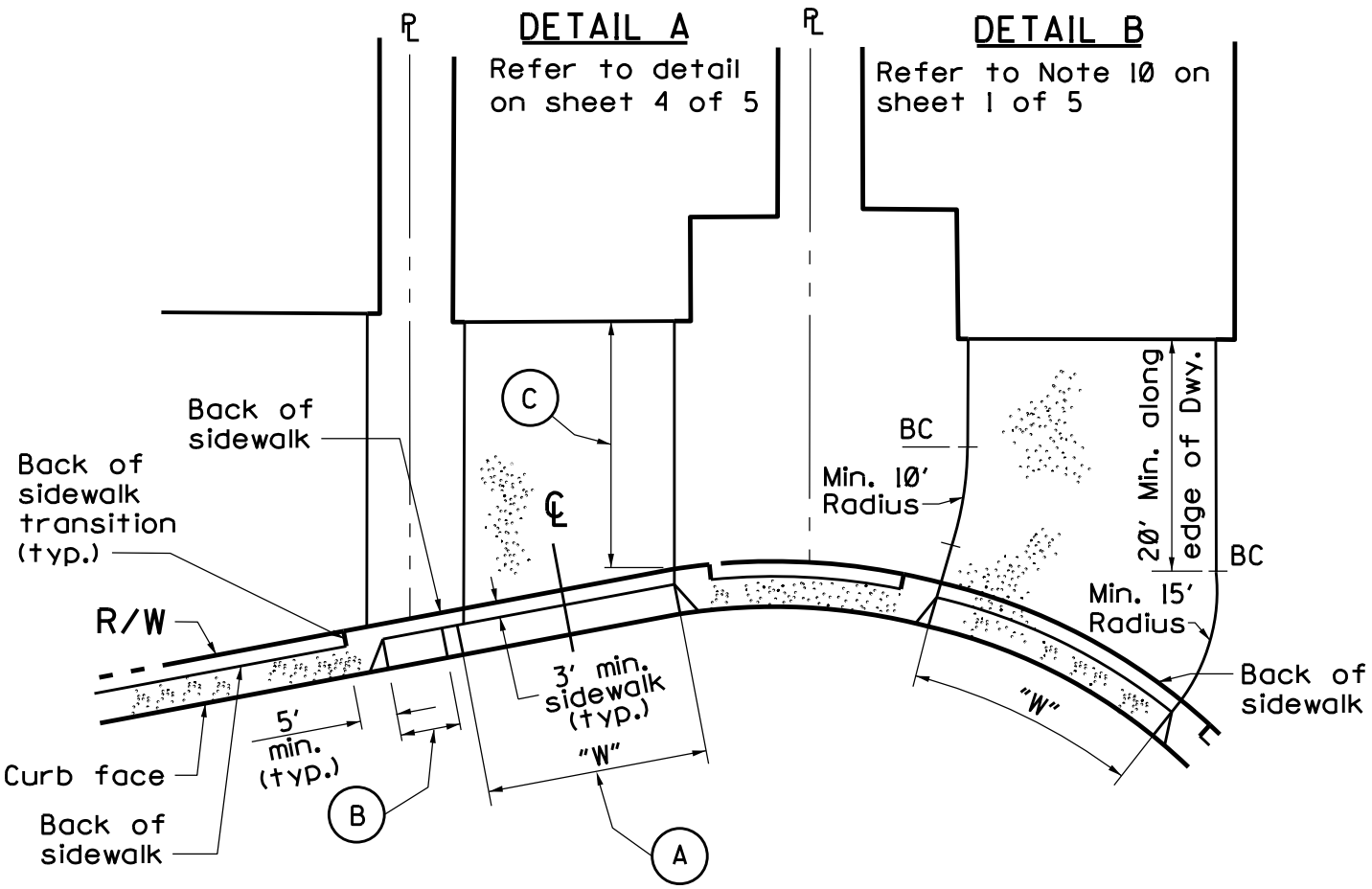

NOTES:

(A) Width of depression (W) shall be designed using projected Dwy. lines where they intersect back of sidewalk and/or curb face. The minimum dimension for W shall be the greatest obtainable length between the projection intersections, measured parallel to the curb face.

(B) 2 feet min. between top of "X". If 2 feet cannot be maintained using the criteria shown above, a continuous depression shall be used per Note 11 on sheet 1 of 5.

(C) Dimension shall be a minimum of 20 feet unless otherwise provided by zoning.

COUNTY OF ORANGE, OC PUBLIC WORKS DEPARTMENT

Approved *Ignacio G. Ochoa, Chief Engineer*

Revision: April 2013

STD. PLAN

1209

DEPRESSED CURB DRIVEWAY APPROACH

SHT. 3 OF 5

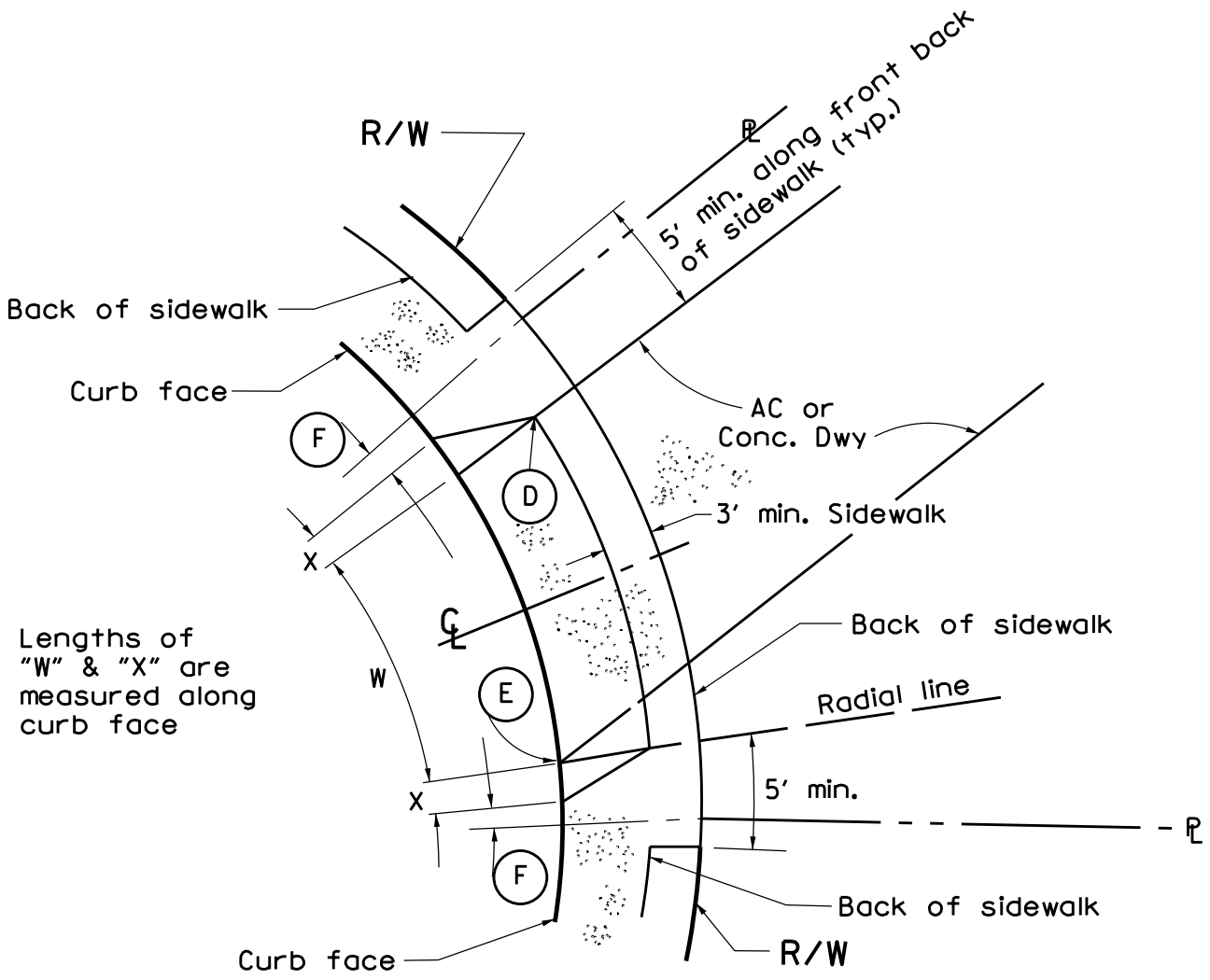

• Refer to Note 9 on sheet 1 of 5

NOTES:

(D) Bottom of "X" is radial to intersection of Dwy. and back of sidewalk. If no sidewalk, intersection to occur at R/W.

(E) Bottom of "X" at intersection of Dwy. projection and curb face.

(F) 1 foot minimum at curb face from top of "X" to radial projection of property line.

COUNTY OF ORANGE, OC PUBLIC WORKS DEPARTMENT

Approved

Ignacio G. Ochoa, Chief Engineer

Revision: April 2013

STD. PLAN

1209

DEPRESSED CURB DRIVEWAY APPROACH

SHT. 4 OF 5

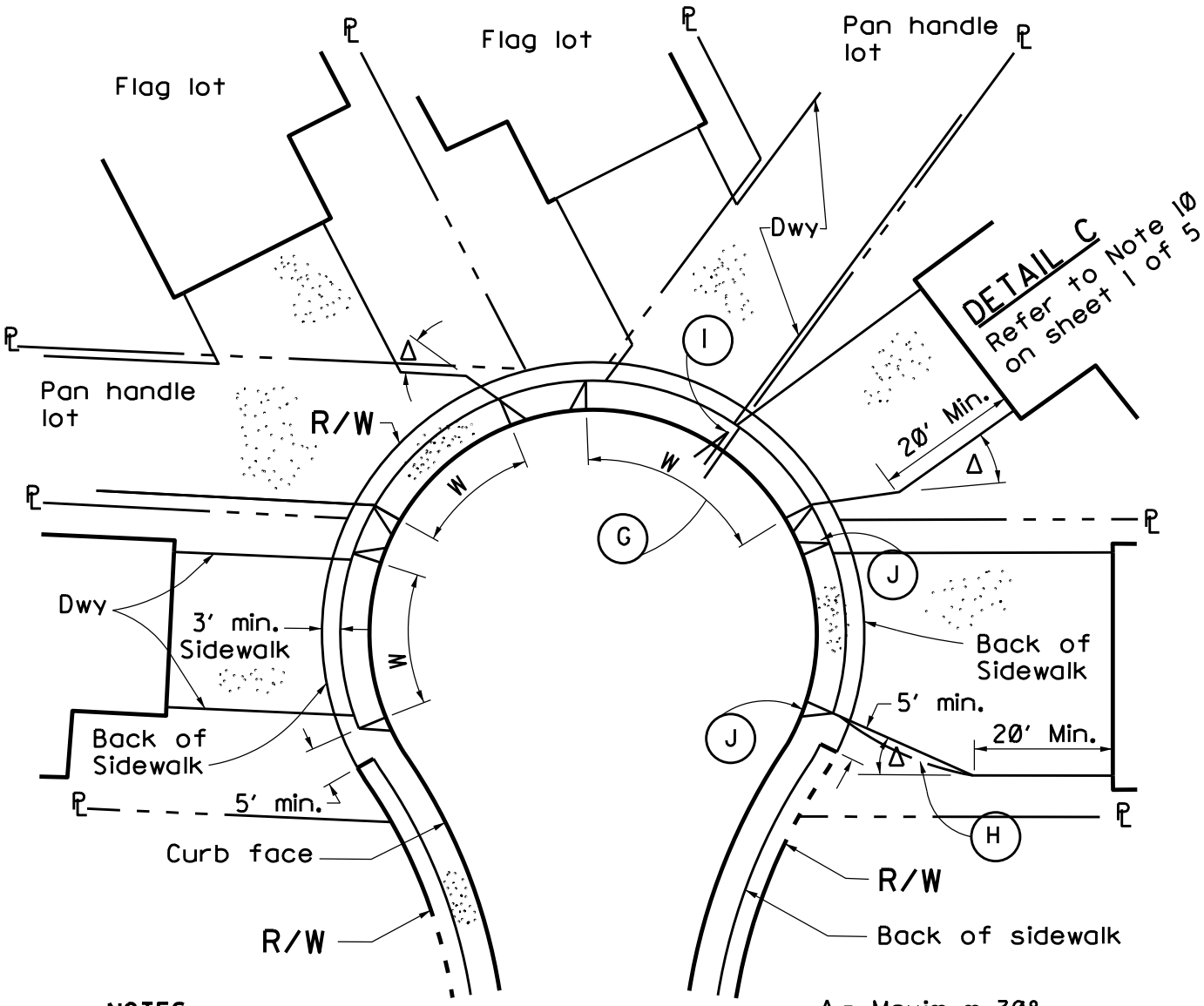

Δ = Maximum 30°

NOTES:

(G) Common driveway, refer to Note 11 on sheet 1 of 5.

(H) Optional curved edge of Dwy. See detail "B" on sheet 3 of 5.

(I) It is permissible to cross Dwy. projections as long as point of intersection is within road R/W.

(J) Placement of "X" per criteria on sheet 4 of 5.

COUNTY OF ORANGE, OC PUBLIC WORKS DEPARTMENT

Approved

Ignacio G. Ochoa, Chief Engineer

Revision: April 2013

STD. PLAN

1209

SHT. 5 OF 5

DEPRESSED CURB DRIVEWAY APPROACH

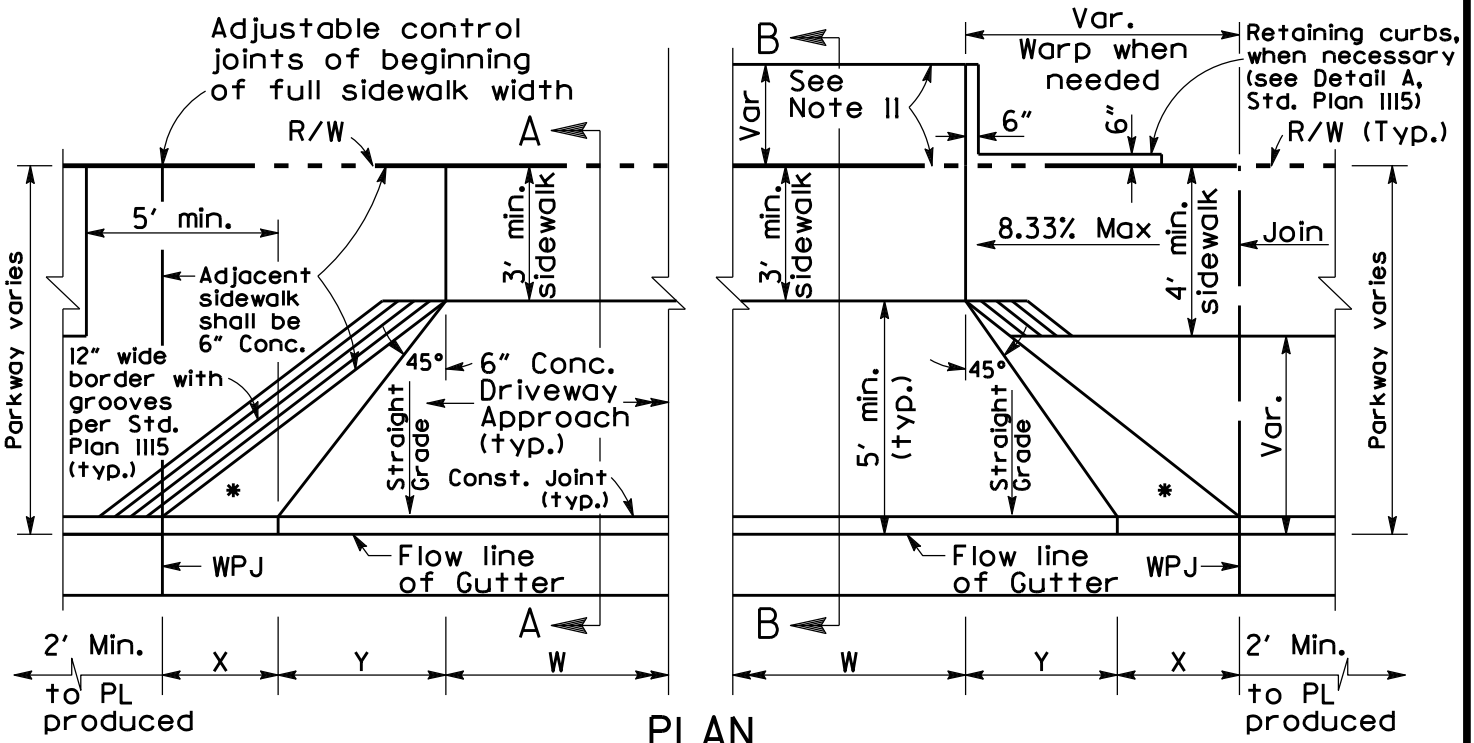

PLAN

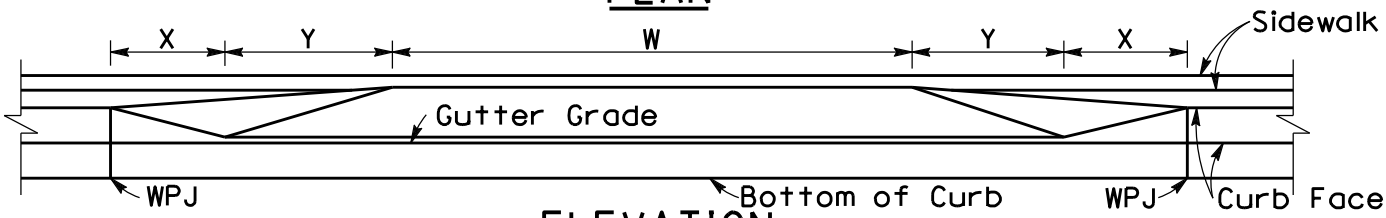

ELEVATION

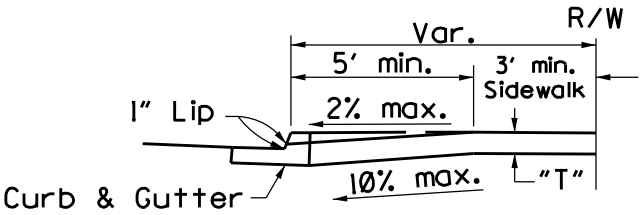

SECTION A-A

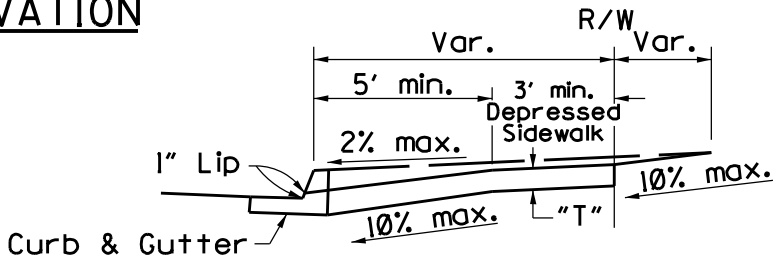

SECTION B-B

SIDEWALK	VALUES OF "X"
Adjacent to R/W	2'
Adjacent to curb	3'
Full Parkway	3'

VALUES OF "W"		
Residential **	Min.	Max.
	18'	28'
Commercial & Industrial		
One-way	12'	14'
Two-way	24'	30'

* "X" is a variable when sidewalk is located where wheelchairs may traverse the surface. Slopes shall not exceed 8.33 percent.

** Common driveways serving 5 or more dwelling units: "W" shall be 28 feet

COUNTY OF ORANGE, OC PUBLIC WORKS DEPARTMENT

Approved

Ignacio G. Ochoa, Chief Engineer

Revision: April 2013

STD. PLAN

1210

SHT. 1 OF 2

FLARED DEPRESSED CURB DRIVEWAY APPROACH

NOTES:

1. PCC sidewalk and ramp thickness "T" shall be 6 inches.
2. AC section may be constructed between back of sidewalk and R/W for residential driveways.
3. Two (2) feet of full height curb shall be maintained between PL and edge of driveway.
4. No less than 22 feet of full height curb shall be maintained between driveways on same property.
5. The total width of depression ("W"+ 2"Y"), in case of multiple driveways on a single ownership parcel frontage, shall not exceed 70 percent of the frontage where frontage is 100 feet or less, or 60 percent where frontage is greater than 100 feet.
6. Design shall be in accordance with Std. Plan 1206 where on-site drainage gutter abuts driveway.
7. Frontage length minus depression width ("W"+ 2"Y") shall not be less than 20 feet.
8. Commercial, industrial and residential driveways having an anticipated ADT greater than 100 vehicles will be designed as Flared Depressed Curb Driveway Approaches per Std. Plan 1210. Residential driveways serving more than 25 units and Commercial and Industrial driveways having anticipated ADTvolume in excess of 1,000 vehicles will be designed as local streets with curb, spandrel, and cross gutter per Std. Plan 122-2-0C subject to approval of the Engineer.
9. Color additives or pattern stamped concrete shall not be used.
10. See Std. Plan 112-2-0C for joint details.
11. Retaining curbs and acquisition of construction easement may be necessary for narrow sidewalks or curb heights in excess of 6 inches.

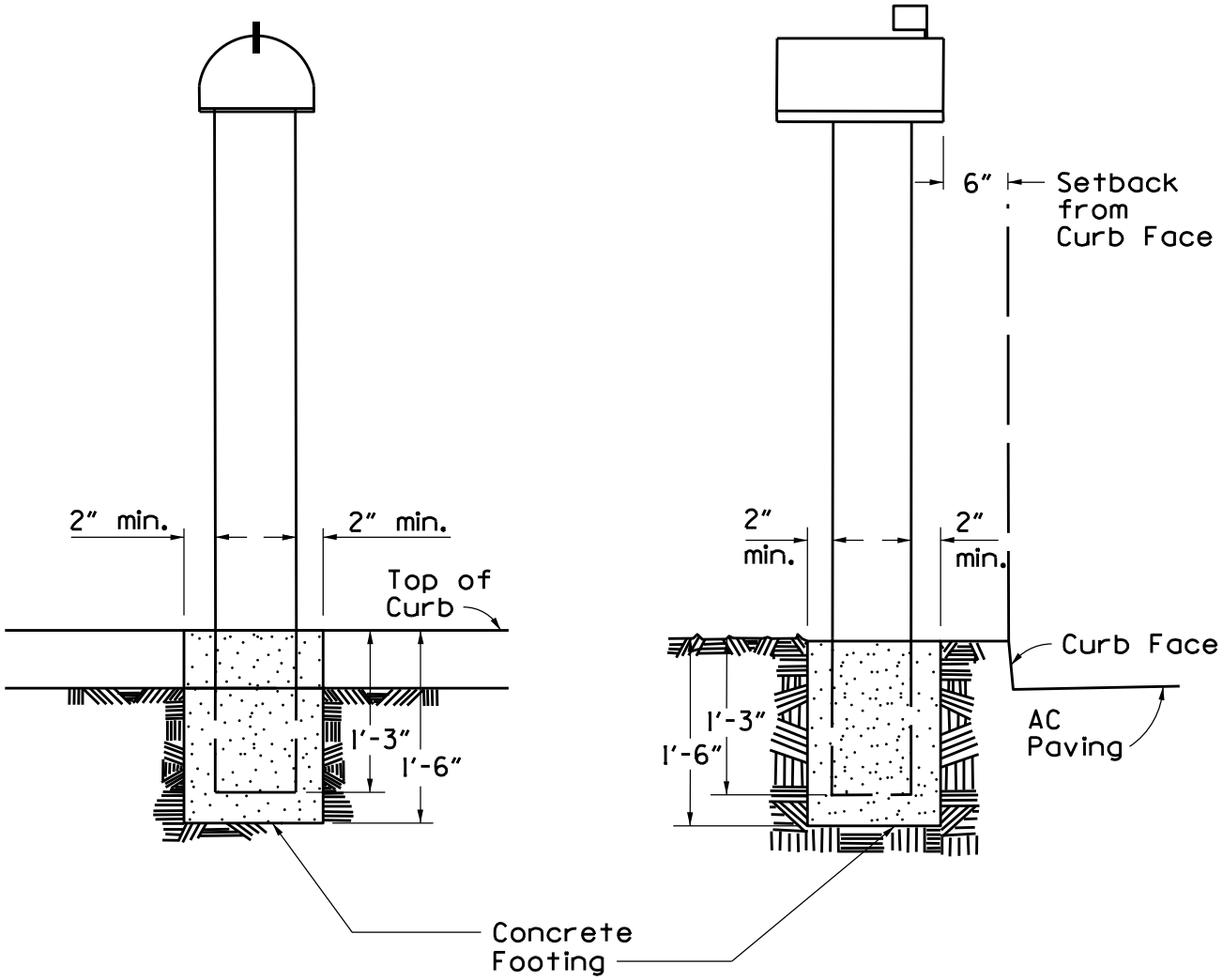

NOTES:

1. Mailbox location, height, and material to be approved by the local Postmaster.
2. Single unit mailbox to be used if parkway is between curb and sidewalk.
3. Mailbox post shall be of treated redwood or metal.

COUNTY OF ORANGE, OC PUBLIC WORKS DEPARTMENT

Approved *Ignacio G. Ochoa, Chief Engineer*

Revision: April 2013

STD. PLAN

1211

SHT. 1 OF 1

SINGLE UNIT MAILBOX DETAIL

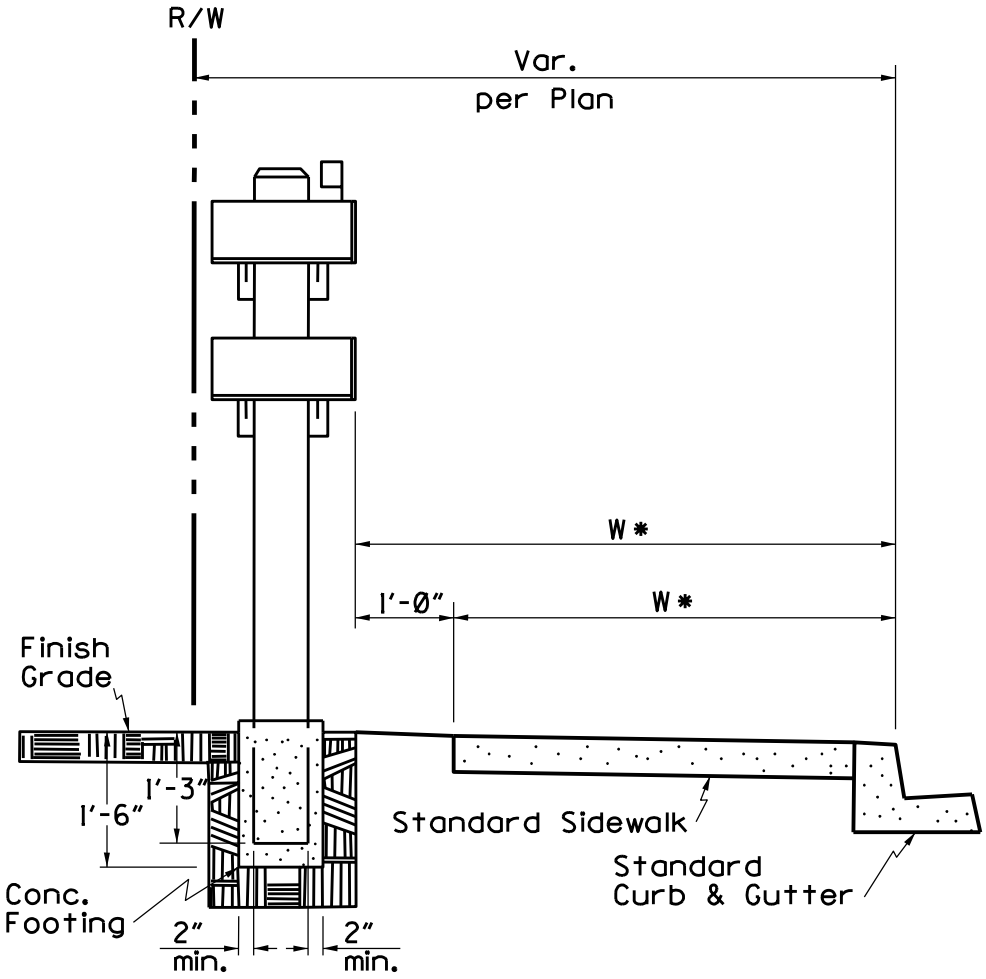

* Please refer to Std. Plan 1205.

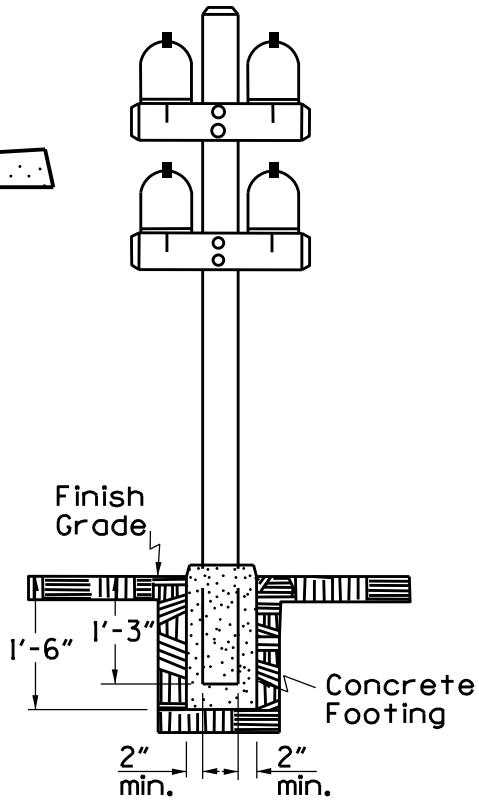

NOTES:

1. Mail box clusters location, height, and material to be approved by the local Postmaster.
2. Mailbox clusters to be used if sidewalk is adjacent to curb.
3. Mailbox post shall be of treated redwood or metal.

COUNTY OF ORANGE, OC PUBLIC WORKS DEPARTMENT

Approved

Ignacio G. Ochoa, Chief Engineer

Revision: April 2013

STD. PLAN

1212

SHT. 1 OF 1

MULTI UNIT MAILBOX DETAIL